The pipe joint

YOU CAN TRUST

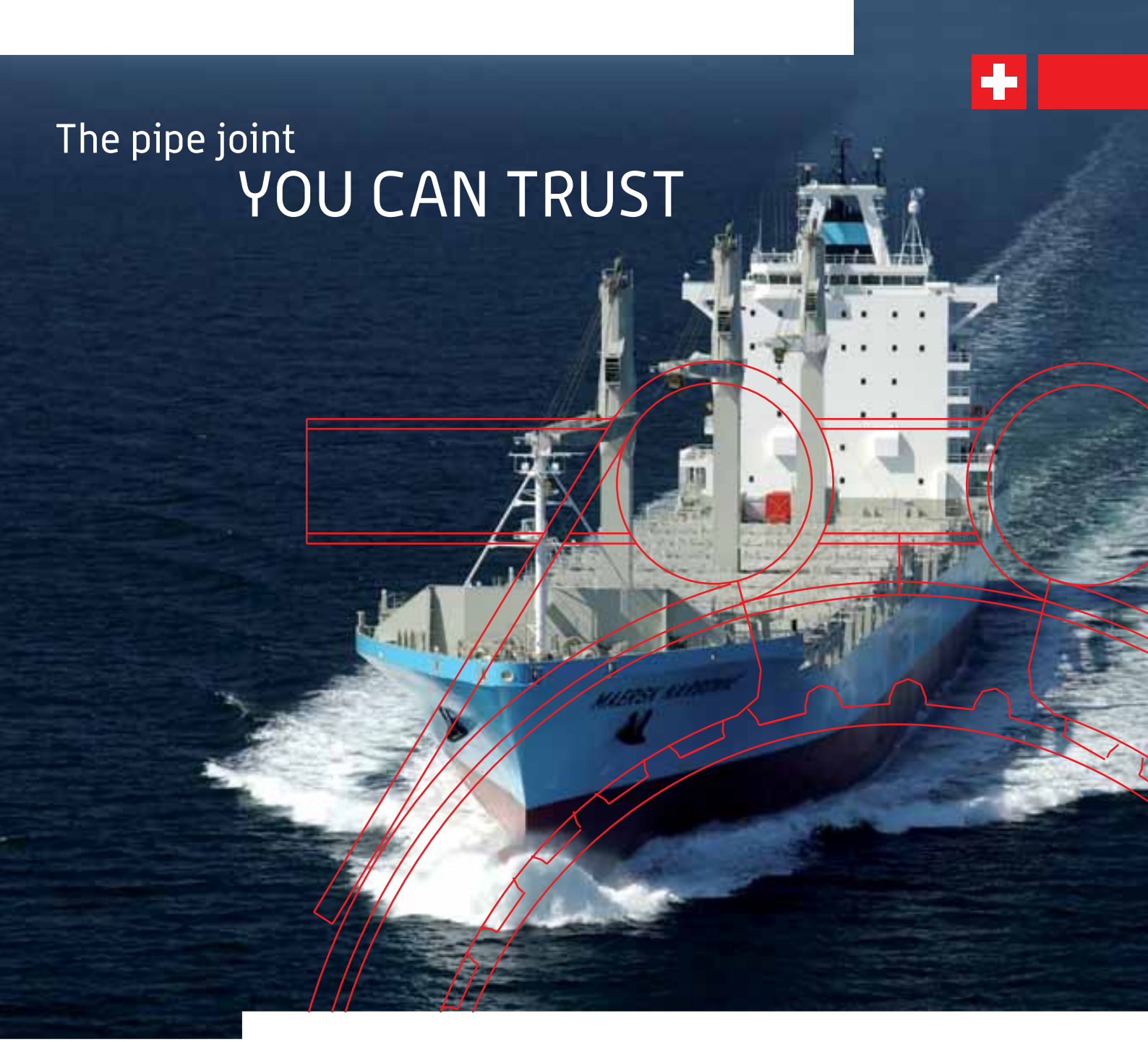

TECHNICAL MANUAL
SHIPBUILDING

straub®
the original

an Aliaxis company

THE TECHNICAL MANUAL FOR SHIPBUILDING.

The name STRAUB is synonymous with Swiss quality, expertise and reliability. As a company operating worldwide and specialising in the field of pipe connections, STRAUB is as renowned for having developed the 'original' pipe-coupling of its type. With 40-years experience and the consistent high standards STRAUB continues to develop new products and innovative pipe work solutions.
The idea of connecting standard pipes with a flexible joining system without having to work on pipe ends was the brainchild of the company's founder, Immanuel Straub, who, on a visit to a shipyard in Northern Germany in the 60's realised the potential of introducing a flexible system that did not require work to be undertaken on pipe ends. Durability, compactness, size and weights of maritime products were becoming all the more important in the building of new ships and this in turn influenced Immanuel Straub's pipe connecting concept and led the way to a new era of maritime pipe construction.

The trademarked STRAUB-METAL-GRIP coupling has been developed and successfully launched into the maritime market. Working in conjunction with German shipbuilders and Germanischer Lloyd, the use and application of these flexible, removable and reusable couplings have been thoroughly tested and fully approved.
The German and French Navy were quick to recognise the many benefits of the STRAUB-METAL-GRIP. Being light, space-saving, efficient and quick to install, this innovative coupling system has to been installed in their frigates, submarines and aircraft carriers.
Navy shock tests have shown that STRAUB couplings remain sealed even in a distressed condition (i.e. following a ship collision or an underwater explosion). This is due to their low weight and is in complete accordance with the principle and classification "Safe to the next Port". Beyond the shipbuilding arena, this coupling is also used successfully in a broad variety of applications such as water, gas, industry, building construction and civil engineering.
The STRAUB brand has become an industry standard worldwide and has become synonymous with excellence and the principle of efficiently joining pipes. To this day, STRAUB maintains its traditional high-safety margin for end-user peace of mind.

OUR QUALITY PRODUCTS – YOUR ADDED VALUE.

ISO 9001
ISO 14001
BUREAU VERITAS
Certification

The ISO-9001-QA certificate was originally attained in 1995 and successful recertification achieved in 1999, 2003 and 2008 thus providing official verification of STRAUB quality. We are currently the sole supplier of all approvals and classes. In 2008, Straub Werke AG was also ISO-14001 certified.

CONTENTS

FLEXIBILITY -
THE PERFECT PROPERTY IN SHIPBUILDING

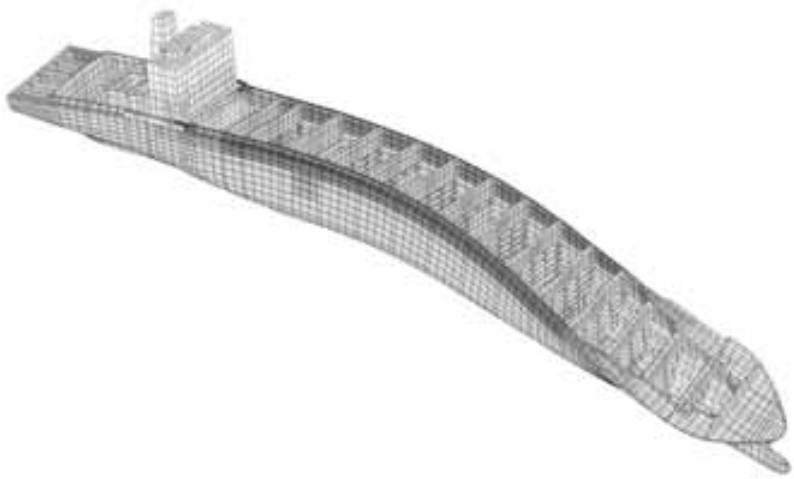

It is generally known that the sea swell can cause significant deformation of the hull and pressure surges in system pipelines whilst the ship is at sea. This leads to a constant strain on the piping systems. Rigid pipe connections such as flanges or welded collars transfer strains directly to other components in the form of stress. Compensators therefore become necessary.

The Original STRAUB pipe coupling combines connection and compensator all in one. The STRAUB design offers pipe flexibility that dissipates stress and increases the component service life. The coupling's rubber sealing gasket efficiently dampens vibrations and noise. Fatigue failures are reduced, system reliability is increased and passenger comfort is much better. These special properties of STRAUB-GRIP and STRAUB-FLEX couplings represent a decisive added benefit for ship owners and operators.

Flexibility in the sealing system
(GRIP and FLEX couplings)

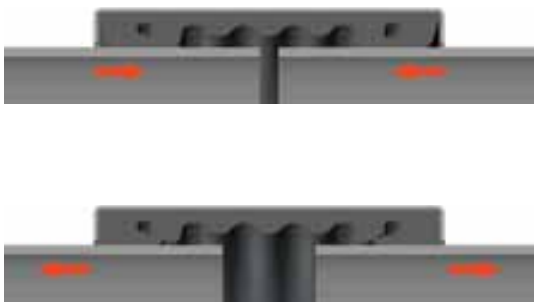

Flexibility in the anchoring system
(GRIP couplings)

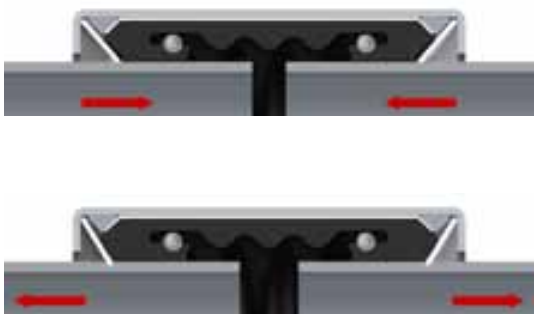

A BASIC CONCEPT

TWO DESIGN VERSIONS:

STRAUB-GRIP
"Pull-out" resistant

STRAUB-FLEX
Axially flexible

EIGHT PRODUCTS:

STRAUB-FIRE-FENCE
"fireproof"

STRAUB-GRIP-L
"economical"

STRAUB-METAL-GRIP
"strong"

STRAUB-FLEX
"flexible"

STRAUB-CLAMP
"for emergencies"

STRAUB-PLAST-GRIP
"the plastics solution"

STRAUB-COMBI-GRIP
"the transition joint"

STRAUB-OPEN-FLEX
"universal wrap-around joint"

Advantages for
SHIPBUILDING

THE SPECIAL PROPERTIES OF STRAUB

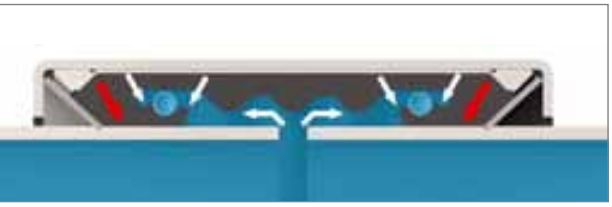

Truly **PROGRESSIVE SEALING EFFECT**
(Lip with pressure equalisation channel)
Increasing internal pressure increases the contact pressure of the sealing lip.

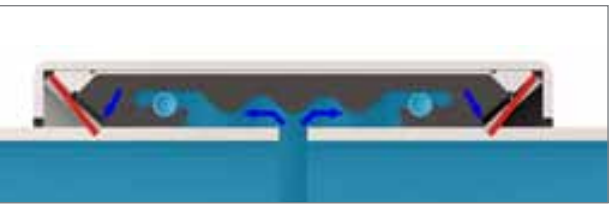

PROGRESSIVE ANCHORING EFFECT
Increasing axial pressure leads to the teeth being pressed into the pipe surface.

USER BENEFITS WITH STRAUB

Space-saving

- Requires low storage space
- Good accessibility
- Locking part can be rotated into the optimum fitting position – access only necessary from one side
- Close pipe arrangement possible, providing space for other components
- Little space required for later installation

Fast and economical

- Installation without special tools
- No work required on the pipe ends
- Removable and reusable
- Short installation time and minimum downtime
- High assembly tolerances

Multi-Purpose

- Connects the broadest variety of pipe materials; ideal also for CuNiFe
- Connects different diameters
- Can be used for pressure, drainage and suction pipes

Safe

- No risk of fire or explosion during installation
- No costs for safety measures
- Quadruple safety factor
- STRAUB has all IACS approvals
- Flexible design absorbs overstressing

Damping

- Plenty of rubber to absorb vibrations/oscillations
- Reduces pressure blows
- Reduces fatigue failures
- Noise reduction increases passenger comfort

Tension-free

- Increases the life of fittings and systems
- Compensates for axial displacement and misalignment
- Coupling and compensator in one

Long life

- Corrosion resistant
- Good resistance to heat and chemicals
- Low torque guarantees long life

Light

- Light weight
- Low transport costs
- Increases the payload

PN16; Ø 114,3 mm

STRAUB PRODUCTS

THE STRAUB FIRE PROTECTION SYSTEM

STRAUB-FIRE-FENCE – FOR APPLICATIONS WHERE FIRE PROTECTION IS A REQUIREMENT.

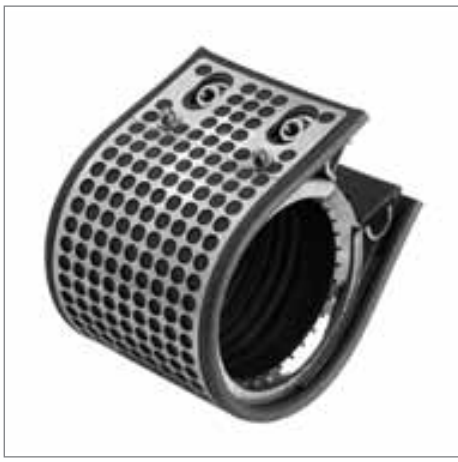

The fireproof coupling is a STRAUB-METAL-GRIP or a STRAUB-GRIP-L with a fire-protection cover. In the event of fire, the intumescent fire protection coating expands, protectively enclosing the coupling. During this process, the coupling retains its full operational capability – without any limitations whatsoever.

Despite the fire protection, the STRAUB-FIRE-FENCE can be installed in a space-saving manner. It has a high level of crush resistance, and thanks to the patented design is still remarkably light weight. The STRAUB-FIRE-FENCE is an impressive and innovative design yet has all the trademarks and properties of traditional classic STRAUB couplings.

We are extremely proud of the fact that our FIRE-FENCE coupling has achieved worldwide certification by all IACS members according to IACS URP 2 and ISO 19921.

Operating pressure: as STRAUB-METAL-GRIP and STRAUB-GRIP-L
Range of diameters:
STRAUB-METAL-GRIP-FIRE-FENCE 30.0 to 406.4 mm
STRAUB-GRIP-L-FIRE-FENCE 26.9 to 406.4 mm
Temperature range: -20˚ C to +100˚ C
Order example:
STRAUB-METAL-GRIP-FIRE-FENCE 76.1, EPDM, W4

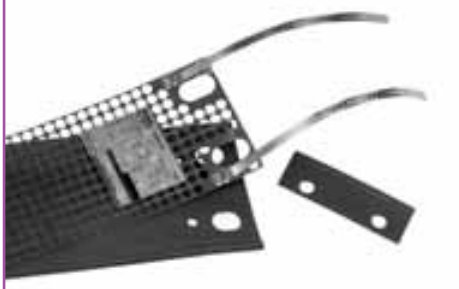

THE MOBILE FIRE PROTECTION COVER

STRAUB couplings that have already been installed can be quickly and easily upgraded to the STRAUB-FIRE-FENCE version using the mobile fire protection cover. Available for models STRAUB-GRIP-L, STRAUB-METAL-GRIP and STRAUB-FLEX.

STRAUB-GRIP-L

THE SAFE AND LIGHT WEIGHT PIPE CONNECTION

"Pull-out" resistant pipe connections made from all stainless steel. The STRAUB-GRIP-L is the light range from STRAUB. It is suitable for all applications in shipbuilding and offshore industries. The particular advantages to the STRAUB-GRIP-L are its low weight and its single-bolt system for the small-diameter couplings.

- For all marine pipe systems, essential and non essential, IACS tested
- Also reliably joins CuNiFe, duplex or titanium pipe materials
- Absorbs stresses in the pipe system and during operation
- Minimal bolt torque to optimise lifespan of seal
- Simple and fast assembly, thus reduce installation time
- Separate independent anchoring and sealing mechanisms

Operating pressure in shipbuilding: 16 bar
Diameters: 26.9 to 609.6 mm
Temperature range: -20° C to 100° C
Order example: STRAUB-GRIP-L 76.1, EPDM, W5

STRAUB-GRIP-L Ø 26.9 - 219.1 mm

Components / Materials	W1	W2	W4	W5
Casing				1.4404 / 1.4571 (V4A)
Bolts				1.4404 / 1.4435 (V4A)
U-Bars				1.4571 (V4A)
Anchoring ring				1.4310
Strip insert (option)				1.4435 (V4A) / HDPE / PVDF

Sealing sleeve EPDM	Temp.:	-20°C up to +100°C
	Medium:	all qualities of water, waste water, air, solids and chemical products
Sealing sleeve NBR	Temp.:	-20°C up to +100°C
	Medium:	water, gas, oil, fuel and other hydrocarbons
Sealing sleeve VITON A (FKM, FPM)	Temp.:	-20°C up to +180°C
	Medium:	ozone, oxygen, acids, gas, oil and fuel (only with strip insert)

other rubber qualities on request (HNBR, ...)

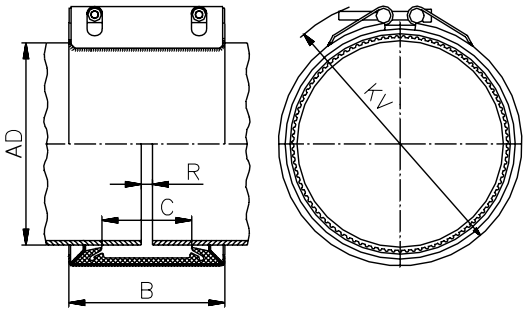

OD [mm]	Clamping range [mm]	PN [bar]	B [mm]	C [mm]	DV [mm]	KV [mm]	R without strip insert [mm]	R with strip insert [mm]	torque rate [Nm]	allen head [mm]	thread M...	weight [kg]
26.9	26.4 - 27.4	16	46	19	43	70	5	5	5	5	6	0.2
30.0	29.5 - 30.5	16	46	17	47	75	5	5	5	5	6	0.2
33.7	33.2 - 34.2	16	46	17	51	75	5	5	5	5	6	0.2
38.0	37.5 - 38.5	16	61	25	57	90	5	5-10	7.5	6	8	0.3
42.4	41.9 - 42.9	16	61	25	62	95	5	5-10	7.5	6	8	0.4
44.5	44.0 - 45.0	16	61	25	64	95	5	5-10	7.5	6	8	0.4
48.3	47.8 - 48.8	16	61	25	67	100	5	5-10	7.5	6	8	0.4
54.0	53.5 - 54.5	16	76	37	76	105	5-10	5-15	7.5	6	8	0.5
57.0	56.4 - 57.6	16	76	37	76	105	5-10	5-15	10	6	8	0.5
60.3	59.7 - 60.9	16	76	37	79	110	5-10	5-15	7.5	6	8	0.5
66.6	64.9 - 67.3	16	95	35	87	126	5-10	5-20	10	6	8	1.1
70.0	68.9 - 70.7	16	95	36	92	131	5-10	5-20	10	6	8	1.1
73.0	72.3 - 73.7	16	95	41	96	142	5-10	5-25	12	6	8	1.1
76.1	75.3 - 76.9	16	95	41	98	142	5-10	5-25	12	6	8	1.1
79.5	78.7 - 80.3	16	95	35	100	142	5-10	5-25	12	6	8	1.1
84.0	83.2 - 84.8	16	95	35	112	152	5-10	5-25	12	6	8	1.2
88.9	88.0 - 89.8	16	95	41	111	157	5-10	5-25	12	6	8	1.2
100.6	99.6 - 101.6	16	95	35	129	172	5-10	5-25	12	6	8	1.4
101.6	100.6 - 102.6	16	95	35	130	172	5-10	5-25	15	6	8	1.4
104.0	103.0 - 105.0	16	95	35	132	172	5-10	5-25	12	6	8	1.5
104.8	103.8 - 105.8	16	95	35	133	172	5-10	5-25	12	6	8	1.5
108.0	106.9 - 109.1	16	95	41	130	172	5-10	5-25	12	6	8	1.4
114.3	113.2 - 115.4	16	95	41	136	177	5-10	5-25	12	6	8	1.4
127.0	125.7 - 128.3	16	110	54	151	195	5-10	5-30	40	8	10	2.3
129.0	127.7 - 130.3	16	110	54	153	195	5-10	5-30	40	8	10	2.4
130.2	128.9 - 131.5	16	110	54	154	200	5-10	5-30	40	8	10	2.4
133.0	131.7 - 134.3	16	110	54	157	200	5-10	5-30	40	8	10	2.5
139.7	138.3 - 141.1	16	110	54	164	210	5-10	5-30	40	8	10	2.6
141.3	139.9 - 142.7	16	110	54	166	210	5-10	5-30	40	8	10	2.6
154.0	152.5 - 155.5	13	110	48	184	225	5-10	5-30	40	8	10	3.0
159.0	157.4 - 160.6	13	110	54	183	225	5-10	5-30	40	8	10	2.8
168.3	166.6 - 170.0	13	110	54	192	230	5-10	5-30	40	8	10	2.9
219.1	216.9 - 221.3	10	142	80	250	295	5-10	5-30	60	10	12	5.9

further sizes on request

Remarks:

- OD 26.9 – 60.3mm with one screw
- Follow fitting / disassembly instructions
- Strip inserts see page 25
- Minimum wall thickness see page 28
- manufactured according to DIN 86128, approved according to IACS 2007

STRAUB-GRIP-L Ø 180.0 - 406.4 mm

Components / Materials	W1	W2	W4	W5
Casing		1.4404 / 1.4571 (V4A)		1.4404 / 1.4571 (V4A)
Bolts		1.7220		1.4404 / 1.4435 (V4A)
U-Bars		1.0737, galvanised		1.4404 / 1.4435 (V4A)
Anchoring ring		1.4310		1.4310
Strip insert (option)		1.4435 (V4A) / HDPE		1.4435 (V4A) / HDPE
Sealing sleeve EPDM	Temp.: -20°C up to +100°C Medium: all qualities of water, waste water, air, solids and chemical products			
Sealing sleeve NBR	Temp.: -20°C up to +100°C Medium: water, gas, oil, fuel and other hydrocarbons			
Sealing sleeve VITON A (FKM, FPM)	Temp.: -20°C up to +180°C Medium: ozone, oxygen, acids, gas, oil and fuel (only with strip insert)			

other rubber qualities on request (HNBR, ...)

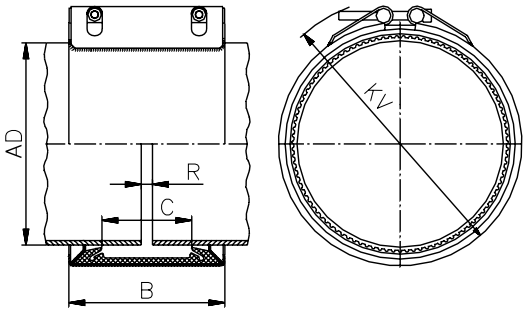

OD [mm]	Clamping range [mm]	PN [bar]	B [mm]	C [mm]	DV [mm]	KV [mm]	R without strip insert [mm]	R with strip insert [mm]	torque rate [Nm]	allen head [mm]	thread M...	weight [kg]
180.0	178.0 - 182.0	10	141	80	205	255	5-10	5-35	50	10	12	5.9
193.7	192.0 - 195.5	10	141	80	224	270	5-10	5-35	50	10	12	4.5
200.0	198.0 - 202.0	10	141	80	230	275	5-10	5-35	50	10	12	4.7
204.0	202.0 - 206.0	10	141	80	234	280	5-10	5-35	50	10	12	4.8
244.5	242.0 - 247.0	5.5	141	80	275	320	5-10	5-35	50	10	12	4.8
250.0	247.5 - 252.5	5.5	141	80	280	325	5-10	5-35	50	10	12	5.4
254.0	251.5 - 256.5	5.5	141	80	284	325	5-10	5-35	50	10	12	5.5
267.0	264.5 - 269.5	5	141	80	297	340	5-10	5-35	50	10	12	5.6
273.0	270.5 - 275.5	4	141	80	303	345	5-10	5-35	60	10	12	5.7
304.0	301.0 - 307.0	4	141	80	334	375	5-10	5-35	60	10	12	5.8
323.9	320.5 - 327.0	3	141	80	354	395	5-10	5-35	60	10	12	6.2
355.6	352.0 - 359.0	2.5	141	80	386	425	5-10	5-35	70	10	12	6.5
406.4	402.5 - 410.5	2	141	80	436	470	5-10	5-35	70	10	12	6.5

further sizes on request

Remarks:

- OD 26.9 – 60.3mm with one screw
- Follow fitting / disassembly instructions
- Strip inserts see page 25
- Minimum wall thickness see page 28
- manufactured according to DIN 86128, approved according to IACS 2007

STRAUB-GRIP-L-FIRE-FENCE Ø 26.9 - 219.1 mm

Components / Materials	W1	W2	W4	W5
Casing				1.4404 / 1.4571 (V4A)
Bolts				1.4404 / 1.4435 (V4A)
U-Bars				1.4571 (V4A)
Anchoring ring				1.4310
Strip insert (option)				1.4435 (V4A) / HDPE / PVDF
Sealing sleeve EPDM	Temp.: -20°C up to +100°C Medium: all qualities of water, waste water, air, solids and chemical products			
Sealing sleeve NBR	Temp.: -20°C up to +100°C Medium: water, gas, oil, fuel and other hydrocarbons			
Sealing sleeve VITON A (FKM, FPM)	Temp.: -20°C up to +180°C Medium: ozone, oxygen, acids, gas, oil and fuel (only with strip insert)			

other rubber qualities on request (HNBR, ...)

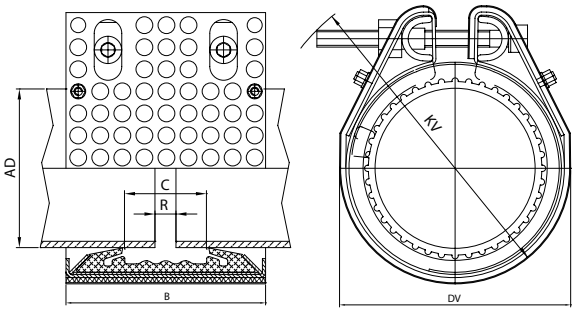

OD [mm]	Clamping range [mm]	PN [bar]	B [mm]	C [mm]	DV [mm]	KV [mm]	R without strip insert [mm]	R with strip insert [mm]	torque rate [Nm]	allen head [mm]	thread M...	weight [kg]
26.9	26.4 - 27.4	16	56	19	53	75	5	5	5	5	6	0.2
30.0	29.5 - 30.5	16	56	17	57	80	5	5	5	5	6	0.2
33.7	33.2 - 34.2	16	56	17	61	80	5	5	5	5	6	0.3
38.0	37.5 - 38.5	16	71	25	67	95	5	5-10	7.5	6	8	0.5
42.4	41.9 - 42.9	16	71	25	72	100	5	5-10	7.5	6	8	0.5
44.5	44.0 - 45.0	16	71	25	74	100	5	5-10	7.5	6	8	0.5
48.3	47.8 - 48.8	16	71	25	77	105	5	5-10	7.5	6	8	0.5
54.0	53.5 - 54.5	16	86	37	86	110	5-10	5-15	7.5	6	8	0.5
57.0	56.4 - 57.6	16	86	37	86	110	5-10	5-15	10	6	8	0.5
60.3	59.7 - 60.9	16	86	37	89	115	5-10	5-15	7.5	6	8	0.7
66.6	64.9 - 67.3	16	111	35	97	131	5-10	5-20	10	6	8	1.0
70.0	68.9 - 70.7	16	111	36	102	136	5-10	5-20	10	6	8	1.2
73.0	72.3 - 73.7	16	111	41	106	147	5-10	5-25	12	6	8	1.5
76.1	75.3 - 76.9	16	111	41	108	147	5-10	5-25	12	6	8	1.4
84.0	83.2 - 84.8	16	111	35	122	157	5-10	5-25	12	6	8	1.5
88.9	88.0 - 89.8	16	111	41	121	162	5-10	5-25	12	6	8	1.5
100.6	99.6 - 101.6	16	111	35	139	177	5-10	5-25	12	6	8	1.6
101.6	100.6 - 102.6	16	111	35	140	177	5-10	5-25	15	6	8	1.6
104.0	103.0 - 105.0	16	111	35	142	177	5-10	5-25	12	6	8	1.7
104.8	103.8 - 105.8	16	111	35	143	177	5-10	5-25	12	6	8	1.7
108.0	106.9 - 109.1	16	111	41	140	177	5-10	5-25	12	6	8	1.7
114.3	113.2 - 115.4	16	111	41	146	182	5-10	5-25	12	6	8	1.8
127.0	125.7 - 128.3	16	126	54	161	200	5-10	5-30	40	8	10	2.4
129.0	127.7 - 130.3	16	126	54	163	200	5-10	5-30	40	8	10	2.5
130.2	128.9 - 131.5	16	126	54	164	205	5-10	5-30	40	8	10	2.5
133.0	131.7 - 134.3	16	126	54	167	205	5-10	5-30	40	8	10	2.6
139.7	138.3 - 141.1	16	126	54	174	215	5-10	5-30	40	8	10	2.9
141.3	139.9 - 142.7	16	126	54	176	215	5-10	5-30	40	8	10	3.0
154.0	152.5 - 155.5	13	126	48	194	230	5-10	5-30	40	8	10	3.1
159.0	157.4 - 160.6	13	126	54	193	230	5-10	5-30	40	8	10	3.2
168.3	166.6 - 170.0	13	126	54	202	235	5-10	5-30	40	8	10	2.9
219.1	216.9 - 221.3	10	158	80	260	300	5-10	5-30	60	10	12	6.9

further sizes on request

Remarks:

- OD 26.9 – 60.3mm with one screw
- Follow fitting / disassembly instructions
- Strip inserts see page 25
- Minimum wall thickness see page 28
- manufactured according to DIN 86128, approved according to IACS 2007 and tested according to ISO 19921:2005E

STRAUB-GRIP-L-FIRE-FENCE Ø 180.0 - 406.4 mm

Components / Materials	W1	W2	W4	W5
Casing		1.4404 / 1.4571 (V4A)		1.4404 / 1.4571 (V4A)
Bolts		1.7220		1.4404 / 1.4435 (V4A)
U-Bars		1.0737, verzinkt		1.4404 / 1.4435 (V4A)
Anchoring ring		1.4310		1.4310
Strip insert (option)		1.4435 (V4A) / HDPE		1.4435 (V4A) / HDPE
Sealing sleeve EPDM	Temp.: -20°C up to +100°C Medium: all qualities of water, waste water, air, solids and chemical products			
Sealing sleeve NBR	Temp.: -20°C up to +100°C Medium: water, gas, oil, fuel and other hydrocarbons			
Sealing sleeve VITON A (FKM, FPM)	Temp.: -20°C up to +180°C Medium: ozone, oxygen, acids, gas, oil and fuel (only with strip insert)			

other rubber qualities on request (HNBR, ...)

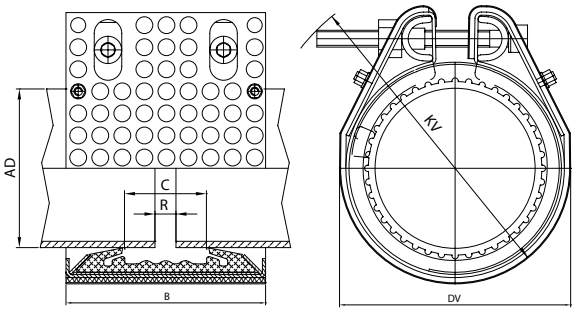

OD [mm]	Clamping range [mm]	PN [bar]	B [mm]	C [mm]	DV [mm]	KV [mm]	R without strip insert [mm]	R with strip insert [mm]	torque rate [Nm]	allen head [mm]	thread M...	weight [kg]
180.0	178.0 - 182.0	10	158	80	260	275	5-10	5-35	50	10	12	5.2
193.7	192.0 - 195.5	10	158	80	275	290	5-10	5-35	50	10	12	4.8
200.0	198.0 - 202.0	10	158	80	280	295	5-10	5-35	50	10	12	5.0
204.0	202.0 - 206.0	10	158	80	285	300	5-10	5-35	50	10	12	5.2
244.5	242.0 - 247.0	5.5	158	80	325	340	5-10	5-35	50	10	12	5.2
250.0	247.5 - 252.5	5.5	158	80	330	345	5-10	5-35	50	10	12	5.7
254.0	251.5 - 256.5	5.5	158	80	330	345	5-10	5-35	50	10	12	5.8
267.0	264.5 - 269.5	5	158	80	345	360	5-10	5-35	50	10	12	5.9
273.0	270.5 - 275.5	4	158	80	350	365	5-10	5-35	60	10	12	6.0
304.0	301.0 - 307.0	4	158	80	380	395	5-10	5-35	60	10	12	6.1
323.9	320.5 - 327.0	3	158	80	400	415	5-10	5-35	60	10	12	6.5
355.6	352.0 - 359.0	2.5	158	80	430	445	5-10	5-35	70	10	12	7.0
406.4	402.5 - 410.5	2	158	80	475	490	5-10	5-35	70	10	12	7.2

further sizes on request

Remarks:

- Follow fitting / disassembly instructions
- Strip inserts see page 25
- Minimum wall thickness see page 28
- manufactured according to DIN 86128, approved according to IACS 2007 and tested according to ISO 19921:2005E

STRAUB-METAL-GRIP

THE HIGH-QUALITY PIPE CONNECTION

"Pull-out" resistant pipe connections for shipbuilding and the offshore oil industry.

The STRAUB-METAL-GRIP is a high-performance coupling. It has all the properties and advantages for the exceptional demands of naval shipbuilding.

- For all marine pipe systems, IACS tested
- Also reliably joins CuNiFe, duplex or titanium pipe materials
- High safety factor for unexpected secondary stresses at sea
- Absorbs stresses in the pipe system and during operation
- Minimal bolt torque, to optimise seal life
- The mechanically supported sealing lips allows higher thermal stress variations
- Special steel bridge design with locking part relief
- Separate independent anchoring and sealing mechanisms
- A sealing lip spring supports the sealing sleeve function
- Strengthened casing and locking part
- Particularly suitable for critical safety and operating systems

Operating pressure in shipbuilding: 16 bar, offshore 20 bar
Diameters: 30.0 to 609.6 mm
Temperature range: -30° C to 100° C
Order example: STRAUB-METAL-GRIP 76.1, NBR, W4

STRAUB-METAL-GRIP Ø 30.0 - 219.1 mm

Components / Materials	W1	W2	W4	W5
Casing		1.4301 (V2A)	1.4301 (V2A)	
Bolts		1.7220	1.4401 (V4A)	
Bars		1.0737, galvanised	1.4301 (V2A)	
Anchoring ring		1.4310	1.4310	
Strip insert (option)		1.4435 (V4A) / PVDF	1.4435 (V4A) / PVDF	
Sealing sleeve EPDM	Temp.: -30°C up to +100°C Medium: all qualities of water, waste water, air, solids and chemical products			
Sealing sleeve NBR	Temp.: -20°C up to +100°C Medium: water, gas, oil, fuel and other hydrocarbons			

other rubber qualities on request (HNBR, Viton, ...)

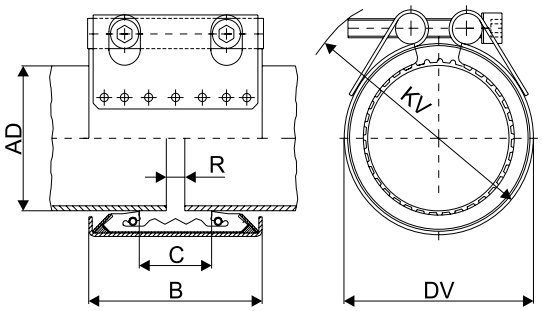

OD [mm]	Clamping range [mm]	PN [bar]	B [mm]	C [mm]	DV [mm]	KV [mm]	R without strip insert [mm]	R with strip insert [mm]	torque rate [Nm]	allen head [mm]	thread M...	weight [kg]
30.0	29.5 - 30.5	16	1	18	47	70	5	5	10	6	8	0.3
33.7	33.2 - 34.2	16	1	18	52	75	5	5	10	6	8	0.4
38.0	37.5 - 38.5	16	61	19	58	90	5	5-10	15	6	8	0.5
42.4	41.9 - 42.9	16	61	20	62	90	5	5-10	15	6	8	0.5
44.5	44.0 - 45.0	16	61	20	64	95	5	5-10	15	6	8	0.5
48.3	47.8 - 48.8	16	61	20	68	95	5	5-10	15	6	8	0.5
54.0	53.5 - 54.5	16	77	38	74	100	5	5-15	20	6	8	0.7
57.0	56.4 - 57.6	16	77	32	77	105	5-10	5-25	20	6	8	0.8
60.3	59.7 - 60.9	16	77	32	82	110	5-10	5-25	20	6	8	0.8
63.5	62.9 - 64.1	16	77	0	84	114	5-10	5-25	35	6	8	0.8
76.1	75.3 - 76.9	16	94	39	100	130	5-10	5-25	35	8	10	1.4
84.0	83.2 - 84.8	16	94	39	112	140	5-10	5-25	35	8	10	1.6
88.9	88.0 - 89.8	16	94	39	117	145	5-10	5-25	35	8	10	1.5
104.0	103.0 - 105.0	16	94	39	133	160	5-10	5-25	35	8	10	1.9
108.0	106.9 - 109.1	16	94	39	133	160	5-10	5-25	35	8	10	1.8
114.3	113.2 - 115.4	16	94	39	139	165	5-10	5-25	35	8	10	1.8
129.0	127.7 - 130.3	16	108	43	160	190	5-15	5-25	60	10	12	3.3
133.0	131.7 - 134.3	16	108	43	160	190	5-15	5-25	60	10	12	3.2
139.7	138.3 - 141.1	16	109	43	168	200	5-15	5-25	60	10	12	3.6
154.0	152.5 - 155.5	16	109	51	186	215	5-15	5-25	60	10	12	4.0
159.0	157.4 - 160.6	16	109	43	187	215	5-15	5-25	60	10	12	3.9
168.3	166.6 - 170.0	16	109	43	200	230	5-15	5-25	60	10	12	4.1
219.1	216.9 - 221.3	16	150	60	259	295	5-15	5-35	100	14	16	9.5

further sizes on request

Remarks:

- Follow fitting / disassembly instructions
- Strip inserts see page 25
- Minimum wall thickness see page 28
- manufactured according to DIN 86128, approved according to IACS 2007

STRAUB-METAL-GRIP Ø 244.5 - 609.6 mm

Components / Materials	W1	W2	W4	W5
Casing	1.0570, hot-dip galv.			
Bolts	1.7220			
Bars	1.0737, galvanised			
Anchoring ring	1.4310			
Strip insert (option)	1.4435 (V4A) / PVDF			
Sealing sleeve EPDM	Temp.: -30°C up to +100°C Medium: all qualities of water, waste water, air, solids and chemical products			
Sealing sleeve NBR	Temp.: -20°C up to +100°C Medium: water, gas, oil, fuel and other hydrocarbons			

other rubber qualities on request (HNBR, Viton, ...)

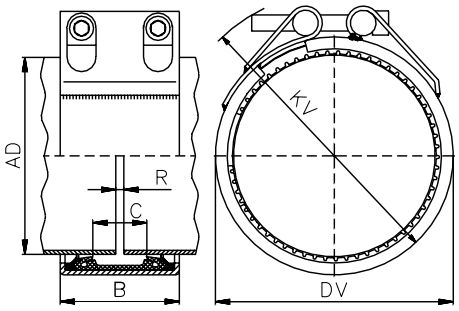

OD [mm]	Clamping range [mm]	PN [bar]	B [mm]	C [mm]	DV [mm]	KV [mm]	R without strip insert [mm]	R with strip insert [mm]	torque rate [Nm]	allen head [mm]	thread M...	weight [kg]
244.5	242.0 - 247.0	14	148	67	290	345	5-15	5-35	180	17	20	14.0
267.0	264.5 - 269.5	12	148	67	312	365	5-15	5-35	180	17	20	14.8
273.0	270.5 - 275.5	12	148	67	318	370	5-15	5-35	180	17	20	15.1
323.9	320.5 - 327.0	10	148	67	369	420	5-15	5-35	230	17	20	16.7
355.6	352.0 - 359.0	8	148	67	401	450	5-15	5-35	230	17	20	18.0
406.4	402.5 - 410.5	8	148	67	451	500	5-15	5-35	230	17	20	20.5
457.2	452.5 - 462.0	6	148	67	502	550	5-15	5-35	250	17	20	22.5
508.0	503.0 - 513.0	5	148	67	604	600	5-15	5-35	250	17	20	29.2
558.8	554.0 - 564.0	4.5	148	67	604	650	5-15	5-35	300	17	20	31.4
609.6	604.5 - 614.5	4	148	67	655	700	5-15	5-35	300	17	20	33.7

further sizes on request

Remarks:

- Follow fitting / disassembly instructions
- Strip inserts see page 25
- Minimum wall thickness see page 28
- manufactured according to DIN 86128, approved according to IACS 2007

STRAUB-METAL-GRIP-FIRE-FENCE Ø 30.0 - 219.1 mm

Components / Materials	W1	W2	W4	W5
Casing		1.4301 (V2A)	1.4301 (V2A)	
Bolts		1.7220	1.4401 (V4A)	
Bars		1.0737, galvanised	1.4301 (V2A)	
Anchoring ring		1.4310	1.4310	
Strip insert (option)		1.4435 (V4A) / PVDF	1.4435 (V4A) / PVDF	
Sealing sleeve EPDM	Temp.: -30°C up to +100°C Medium: all qualities of water, waste water, air, solids and chemical products			
Sealing sleeve NBR	Temp.: -20°C up to +100°C Medium: water, gas, oil, fuel and other hydrocarbons			

other rubber qualities on request (HNBR, Viton, ...)

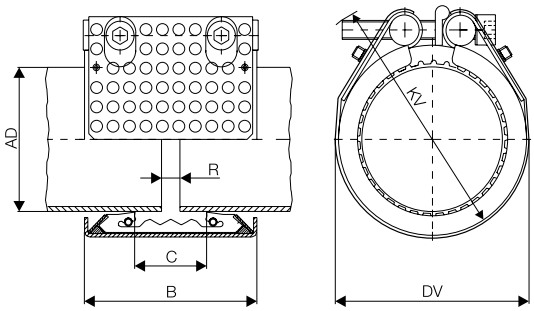

OD [mm]	Clamping range [mm]	PN [bar]	B [mm]	C [mm]	DV [mm]	KV [mm]	R without strip insert [mm]	R with strip insert [mm]	torque rate [Nm]	allen head [mm]	thread M...	weight [kg]
30.0	29.5 - 30.5	16	67	18	57	75	5	5	10	6	8	0.3
33.7	33.2 - 34.2	16	67	18	62	80	5	5	10	6	8	0.4
38.0	37.5 - 38.5	16	71	19	68	95	5	5-10	15	6	8	0.5
42.4	41.9 - 42.9	16	71	20	72	95	5	5-10	15	6	8	0.6
44.5	44.0 - 45.0	16	71	20	74	100	5	5-10	15	6	8	0.6
48.3	47.8 - 48.8	16	71	20	78	100	5	5-10	15	6	8	0.6
54.0	53.5 - 54.5	16	87	38	84	105	5	5-15	20	6	8	0.8
57.0	56.4 - 57.6	16	87	32	87	110	5-10	5-25	20	6	8	0.9
60.3	59.7 - 60.9	16	87	32	87	115	5-10	5-25	20	6	8	1.0
63.5	62.9 - 64.1	16	87	32	94	119	5-10	5-25	35	6	8	1.1
76.1	75.3 - 76.9	16	110	39	110	135	5-10	5-25	35	8	10	1.6
84.0	83.2 - 84.8	16	110	39	122	145	5-10	5-25	35	8	10	1.7
88.9	88.0 - 89.8	16	110	39	127	150	5-10	5-25	35	8	10	1.7
104.0	103.0 - 105.0	16	110	39	143	165	5-10	5-25	35	8	10	2.0
108.0	106.9 - 109.1	16	110	39	143	165	5-10	5-25	35	8	10	1.8
114.3	113.2 - 115.4	16	110	39	149	170	5-10	5-25	35	8	10	2.2
129.0	127.7 - 130.3	16	124	43	170	195	5-15	5-25	60	10	12	3.1
133.0	131.7 - 134.3	16	125	43	170	195	5-15	5-25	60	10	12	3.4
139.7	138.3 - 141.1	16	125	43	178	205	5-15	5-25	60	10	12	3.9
154.0	152.5 - 155.5	16	125	51	196	220	5-15	5-25	60	10	12	4.2
159.0	157.4 - 160.6	16	125	43	197	220	5-15	5-25	60	10	12	4.2
168.3	166.6 - 170.0	16	125	43	210	235	5-15	5-25	60	10	12	4.3
219.1	216.9 - 221.3	16	166	60	269	300	5-15	5-35	100	14	16	10.3

further sizes on request

Remarks:

- Follow fitting / disassembly instructions
- Strip inserts see page 25
- Minimum wall thickness see page 28
- manufactured according to DIN 86128, approved according to IACS 2007 and tested according to ISO 19921:2005E

STRAUB-METAL-GRIP-FIRE-FENCE Ø 244.5 - 457.2 mm

Components / Materials	W1	W2	W4	W5
Casing	1.0570, hot-dip galv.	1.4301 (V2A)	1.4301 (V2A)	
Bolts	1.7220	1.7220	1.4401 (V4A)	
Bars	1.0737, galvanised	1.0737, galvanised	1.4301 (V2A)	
Anchoring ring	1.4310	1.4310	1.4310	
Strip insert (option)	1.4435 (V4A) / PVDF	1.4435 (V4A) / PVDF	1.4435 (V4A) / PVDF	
Sealing sleeve EPDM	Temp.: -30°C up to +100°C Medium: all qualities of water, waste water, air, solids and chemical products			
Sealing sleeve NBR	Temp.: -20°C up to +100°C Medium: water, gas, oil, fuel and other hydrocarbons			

other rubber qualities on request (HNBR, Viton, ...)

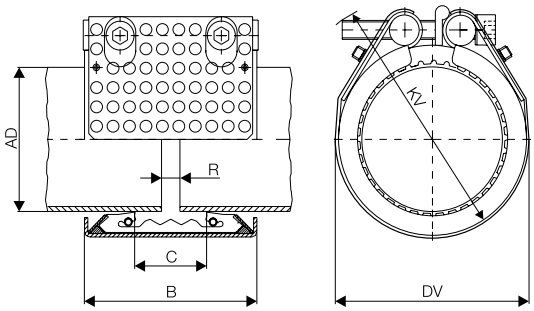

OD [mm]	Clamping range [mm]	PN [bar]	B [mm]	C [mm]	DV [mm]	KV [mm]	R without strip insert [mm]	R with strip insert [mm]	torque rate [Nm]	allen head [mm]	thread M...	weight [kg]
244.5	242.0 - 247.0	14	164	67	300	350	5-15	5-35	180	17	20	14.3
267.0	264.5 - 269.5	12	164	67	322	370	5-15	5-35	180	17	20	15.1
273.0	270.5 - 275.5	12	164	67	328	375	5-15	5-35	180	17	20	15.4
323.9	320.5 - 327.0	10	164	67	379	425	5-15	5-35	230	17	20	17.0
355.6	352.0 - 359.0	8	164	67	411	455	5-15	5-35	230	17	20	18.3
406.4	402.5 - 410.5	8	164	67	461	505	5-15	5-35	230	17	20	20.8
457.2	452.5 - 462.0	6	164	67	512	555	5-15	5-35	250	17	20	22.8

further sizes on request

Remarks:

- Follow fitting / disassembly instructions
- Strip inserts see page 25
- Minimum wall thickness see page 28
- manufactured according to DIN 86128, approved according to IACS 2007 and tested according to ISO 19921:2005E

STRAUB-FLEX

THE FLEXIBLE –
CONNECTION AND COMPENSATOR COMBINED

Axially flexible pipe connection for all pipe materials. There is significant added value in combining the connection of pipes and the simultaneous compensation for axial movement. The joining pipe-ends are isolated as the coupling sealing gasket is only ever in contact with the pipe-ends and vibrations, sound and oscillations are therefore optimally absorbed. The broad range of potential applications in shipbuilding and in the offshore oil industry make STRAUB-FLEX a versatile, efficient and cost-effective solution and the ideal alternative to other pipe connection methods.

- For all pipe systems, essential and non-essential, IACS tested
- Tested and approved in accordance with current standards and the IACS regulations for shipbuilding
- Particularly suitable as compensator for axial movement
- Best damping characteristics
- Connects all pipe materials
- Suitable for submerged applications
- Progressive sealing effect

Tested nominal pressure: 16 bar
Diameters: up to 609.6 mm
Temperature range: -20° C to 100° C
Order example: STRAUB-FLEX 1L, 76.1 EPDM, W5

STRAUB-FLEX 1 / STRAUB-FLEX 2 Ø 48.3 - 609.6 mm

Components / Materials	W1	W2	W4	W5
Casing		1.4404 / 1.4571 (V4A) / 1.4301 (V2A)		1.4404 / 1.4571 (V4A)
Bolts		1.7220		1.4404 / 1.4435 (V4A)
Bars		1.0737, galvanised		1.4404 / 1.4435 (V4A)
Strip insert (option)		1.4435 (V4A) / PVDF from 180mm HDPE		1.4435 (V4A) / PVDF from 180mm HDPE

Sealing sleeve EPDM	Temp.:	-20°C up to +100°C
	Medium:	all qualities of water, waste water, air, solids and chemical products
Sealing sleeve NBR	Temp.:	-20°C up to +100°C
	Medium:	water, gas, oil, fuel and other hydrocarbons
Sealing sleeve VITON A (FKM, FPM)	Temp.:	-20°C up to +180°C
	Medium:	ozone, oxygen, acids, gas, oil and fuel (only with strip insert)

other rubber qualities on request (HNBR, ...)

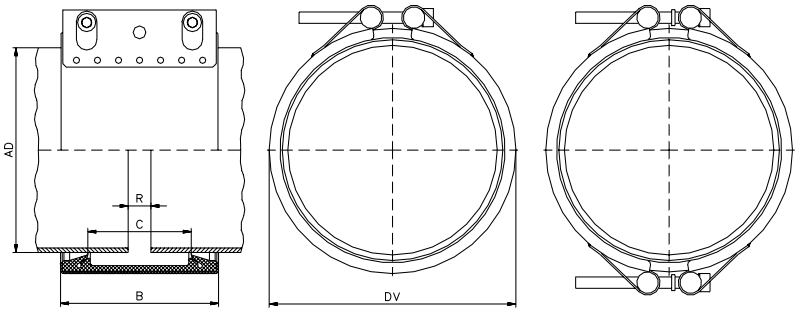

OD [mm]	Clamping range [mm]	PN [bar]	B [mm]	C [mm]	DV [mm]	KV [mm]	R without strip insert [mm]	R with strip insert [mm]	torque rate [Nm]	allen head [mm]	thread M...	weight [kg]
48.3	47.0 - 49.5	16	75	35	70	85	5	15	7.5	6	8	0.5
54.0	52.5 - 55.5	16	75	35	76	90	5	15	7.5	6	8	0.6
57.0	55.5 - 58.5	16	75	35	79	95	5	15	7.5	6	8	0.6
60.3	59.0 - 61.5	16	75	35	82	95	5	15	7.5	6	8	0.6
73.0	71.5 - 74.5	16	94	51	95	117	5	25	7.5	6	8	0.8
76.1	74.5 - 77.5	16	94	51	98	122	5	25	7.5	6	8	0.8
84.0	82.5 - 85.5	16	94	51	106	127	5	25	7.5	6	8	0.9
88.9	87.5 - 90.5	16	94	51	111	132	5	25	7.5	6	8	1.0
100.6	99.0 - 102.5	16	94	51	123	147	5	25	7.5	6	8	1.0
101.6	100.0 - 103.5	16	94	51	124	147	5	25	7.5	6	8	1.0
104.0	102.5 - 105.5	16	94	51	126	147	5	25	7.5	6	8	1.0
104.8	103.0 - 106.5	16	94	51	127	147	5	25	7.5	6	8	1.0
108.0	106.5 - 109.5	16	94	51	130	152	5	25	7.5	6	8	1.0
114.3	112.5 - 116.0	16	94	51	136	157	5	25	7.5	6	8	1.1
127.0	125.0 - 129.0	16	107	62	149	165	5	35	10	8	10	1.4
129.0	127.0 - 131.0	16	107	62	151	165	5	35	10	8	10	1.4
130.2	128.5 - 132.0	16	107	62	152	165	5	35	10	8	10	1.4
133.0	131.0 - 135.0	16	107	62	155	170	5	35	10	8	10	1.4
139.7	138.0 - 141.5	16	107	62	162	175	5	35	10	8	10	1.4
141.3	139.5 - 143.0	16	107	62	163	180	5	35	10	8	10	1.4
154.0	152.0 - 156.0	16	107	62	176	190	5	35	10	8	10	1.5
159.0	157.0 - 161.0	16	107	62	181	195	5	35	10	8	10	1.5
168.3	166.0 - 170.5	16	107	62	190	205	5	35	10	8	10	1.7
219.1	217.0 - 222.0	10	138	91	246	291	10	35	10	8	10	2.9
273.0	270.0 - 276.0	8	138	91	300	341	10	35	15	8	10	3.3
323.9	321.0 - 327.0	7	138	91	351	390	10	35	15	8	10	
406.4	404.0 - 409.0	5.5	138	91	433	467	10	35	20	8	10	4.4
609.6	606.0 - 613.0	3.5	138	91	637	665	10	35	25	8	10	6.0

further sizes on request

Remarks:

- Follow fitting / disassembly instructions
- up to Ø 168.3 STRAUB-FLEX 1, from Ø 219.1 STRAUB-FLEX 2
- Admissible maximum axial movement of the pipes: FLEX 1 max. 5mm / FLEX 2 max. 10mm
- Strip inserts see page 25
- manufactured according to DIN 86128, approved according to IACS 2007

STRAUB REPAIR CONCEPT

STRAUB-OPEN-FLEX

Small areas of damage such as holes, cracks, burst pipes or leaking connections can be repaired quickly and safely with STRAUB-OPEN-FLEX.

STRAUB-CLAMP

With the STRAUB-CLAMP, larger areas of damage and corrosion damage can be temporarily repaired. It can be supplied as a single part or two-part version in the range of DN 40 to DN 400. Damaged areas of up to 250 mm in size can be repaired.

PROCEDURE

Open the coupling and place over the damaged area. Then tighten the locking bolts to the specified torque.

TWO STRAUB-METAL-GRIP, STRAUB-GRIP-L or STRAUB-FLEX couplings and a fitting piece

Longitudinal cracks, groups of holes and leaking connections over longer stretches can be quickly and permanently repaired with two STRAUB-GRIP or STRAUB-FLEX couplings and a fitting piece.

Cut out the damaged area and insert a suitable fitting piece with STRAUB couplings. Centre the couplings over the pipe end. Then tighten the locking bolts to the specified torque.

STRAUB-OPEN-FLEX 1 L Ø 48.3 - 168.3 mm

Components / Materials	W1	W2	W4	W5
Casing		1.4404 / 1.4571 (V4A) / 1.4301 (V2A)		1.4404 / 1.4571 (V4A)
Bolts		1.7220		1.4404 / 1.4435 (V4A)
Bars		1.0737, galvanised		1.4404 / 1.4435 (V4A)
Strip insert (option)		1.4435 (V4A) / PVDF from 180mm HDPE		1.4435 (V4A) / PVDF from 180mm HDPE
Sealing sleeve EPDM	Temp.: -20°C up to +100°C Medium: all qualities of water, waste water, air, solids and chemical products			
Sealing sleeve NBR	Temp.: -20°C up to +100°C Medium: water, gas, oil, fuel and other hydrocarbons			
Sealing sleeve VITON A (FKM, FPM)	Temp.: -20°C up to +180°C Medium: ozone, oxygen, acids, gas, oil and fuel (only with strip insert)			

other rubber qualities on request (HNBR, ...)

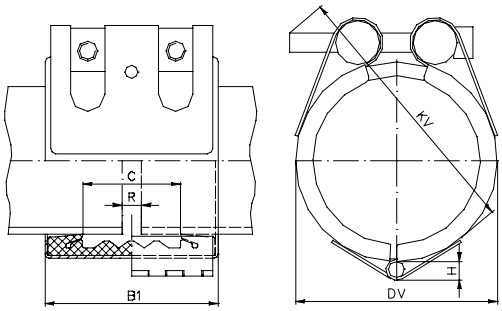

Hinge (H):

OD	48.3 - 60.3:	7.0 mm
OD	73.0 - 114.3:	9.0 mm
OD	127.0 - 168.3:	9.5 mm

OD [mm]	Clamping range [mm]	PN [bar]	B [mm]	C [mm]	DV [mm]	KV [mm]	R without strip insert [mm]	R with strip insert [mm]	torque rate [Nm]	allen head [mm]	thread M...	weight [kg]
48.3	47.0 - 49.5	16	75	35	70	85	5	15	7.5	6	8	0.6
54.0	52.5 - 55.5	16	75	35	76	90	5	15	7.5	6	8	0.0
57.0	55.5 - 58.5	16	75	35	79	95	5	15	7.5	6	8	0.0
60.3	59.0 - 61.5	16	75	35	82	95	5	15	7.5	6	8	0.6
73.0	71.5 - 74.5	16	94	51	95	117	5	25	10	6	8	0.9
76.1	74.5 - 77.5	16	94	51	98	122	5	25	10	6	8	0.9
84.0	82.5 - 85.5	16	94	51	106	127	5	25	10	6	8	0.9
88.9	87.5 - 90.5	16	94	51	111	132	5	25	10	6	8	1.0
100.6	99.0 - 102.5	16	94	51	123	147	5	25	10	6	8	0.0
101.6	100.0 - 103.5	16	94	51	124	147	5	25	10	6	8	1.0
104.0	102.5 - 105.5	16	94	51	126	147	5	25	10	6	8	0.0
104.8	103.0 - 106.5	16	94	51	127	147	5	25	10	6	8	0.0
108.0	106.5 - 109.5	16	94	51	130	152	5	25	10	6	8	1.1
114.3	112.5 - 116.0	16	94	51	136	157	5	25	10	6	8	1.1
127.0	125.0 - 129.0	16	107	62	149	165	5	35	12	8	10	0.0
129.0	127.0 - 131.0	16	107	62	151	165	5	35	12	8	10	1.4
130.2	128.5 - 132.0	16	107	62	152	165	5	35	12	8	10	1.4
133.0	131.0 - 135.0	16	107	62	155	170	5	35	12	8	10	0.0
139.7	138.0 - 141.5	16	107	62	162	175	5	35	12	8	10	1.9
141.3	139.5 - 143.0	16	107	62	163	180	5	35	12	8	10	0.0
154.0	152.0 - 156.0	16	107	62	176	190	5	35	12	8	10	2.0
159.0	157.0 - 161.0	16	107	62	181	195	5	35	12	8	10	2.0
168.3	166.0 - 170.5	16	107	62	190	205	5	35	12	8	10	2.1

further sizes on request

Remarks:

- Follow fitting / disassembly instructions
- Admissible maximum axial movement of the pipes: OPEN-FLEX 1 max. 5mm
- Strip inserts see page 25

STRAUB-CLAMP Ø 44.0 - 420.0 mm

Components	Materials	
Casing	1.4301 (V2A)	
Bolts	1.4301 (V2A)	
Bars	1.4301 (V2A)	
Sealing sleeve EPDM	Temp.: Medium:	-5°C up to +25°C all qualities of water, waste water, air, solids and chemical products
Sealing sleeve NBR	Temp.: Medium:	-5°C up to +25°C water, gas, oil, fuel and other hydrocarbons

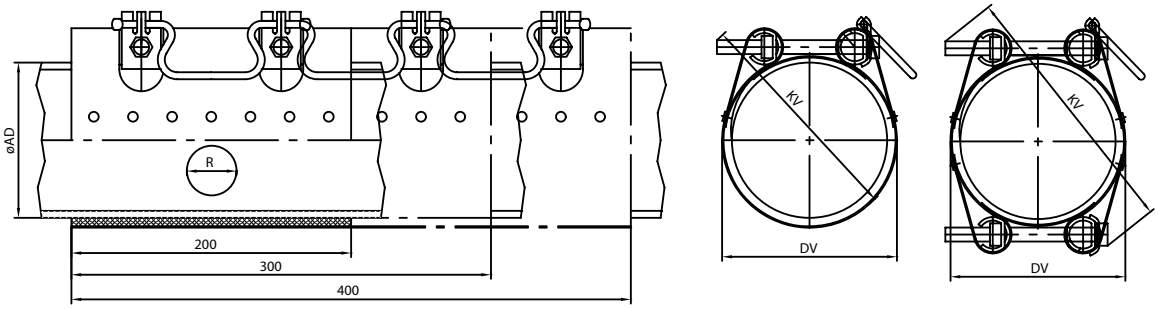

OD [mm]	Clamping range [mm]	PN [bar]	2 locking bolts [mm]	3 locking bolts [mm]	4 locking bolts [mm]	DV [mm]	KV [mm]	torque rate [Nm]	allen head [mm]	thread M...
44.0	44-48	16	200	300		60	117	20	17	10
48.0	48-52	16	200	300		64	120	20	17	10
60.0	60-67	16	200	300		79	127	20	17	10
67.0	67-74	16	200	300		86	130	20	17	10
88.0	88-110	16	200	300	400	117	186	20	17	10
100.0	100-120	16	200	300	400	132	197	20	17	10
120.0	120-140	16	200	300	400	152	215	20	17	10
140.0	140-160	16	200	300	400	172	237	35	19	12
159.0	159-180	16	200	300	400	192	255	35	19	12
168.0	168-189	16	200	300	400	201	264	35	19	12
190.0	190-210	16	200	300	400	190	284	35	19	12
210.0	210-230	10	200	300	400	242	303	35	19	12
218.0	218-238	10	200	300	400	252	312	35	19	12
269.0	269-289	10	200	300	400	301	360	35	19	12
315.0	315-335	6	200	300	400	347	405	35	19	12
337.0	337-358	6		300	400	370	427	35	19	12
365.0	365-385	5			400	397	453	35	19	12
410.0	410-430	5			400	442	498	35	19	12
420.0	420-440	5			400	452	508	35	19	12

further sizes and types on request

Remarks:

- Follow fitting / disassembly instructions
- up to Ø 67.0 one piece, from Ø 88.0 two pieces
- Maximum axial length of damaged area = Clamp length - 150mm
- Radial length of damaged area max. 20% of pipe outside diameters
- The repair clamp must be centred over the damaged area
- The clamp cannot be used for differing pipe diameters (transitions).
- Test pressure = 1.5 x working pressure (PN)

ACCESSORIES

Strip inserts

These protect the sealing collar during increased mechanical or chemical loads in the area of the pipe end. Strip inserts are required for:

– large pipe end gaps
– axial movements (expansion/contraction)
– large misalignments and axial shifts
– Vacuum / underpressure (e.g. suction line)
– external pressure (e.g. underwater pipes)
– high temperatures
– fuel applications
– rubber swelling due to chemical contact

Installation can also be carried out at a later date for all couplings. The material selection is determined by the medium and the temperature. Plastic strip inserts for normal temperatures and chemicals, steel strip inserts for higher temperatures, vacuum and external pressure. Combinations of plastic and steel are also possible. T-profile strip inserts prevent the coupling moving due to axial changes in length and dynamic variations of load on the pipe system.

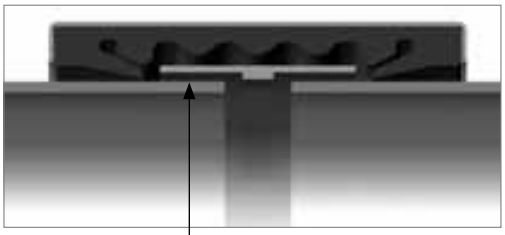

OPEN-FLEX fitting pliers

OPEN-FLEX couplings are opened during installation and closed around the pipe. The cut collar must be pressed with a certain force to achieve a perfect seal. At the same time, the rubber collar presses on the metal bridge of the coupling and thus makes it difficult to easily reinsert the locking bolts. This pressing force can be applied easily and saving energy with the OPEN-FLEX fitting pliers.

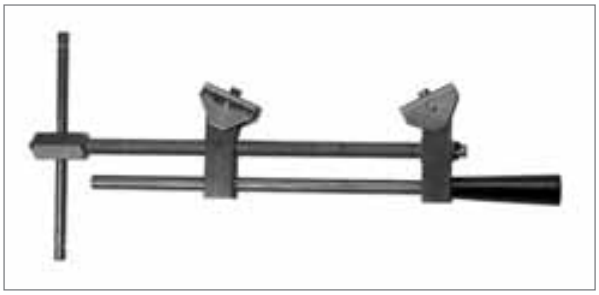

Earth connector

In contrast to STRAUB-GRIP couplings, FLEX/OPEN-FLEX couplings have no electrical conductivity and should be considered as insulating connections. If required, an electrical bridge from pipe to pipe can be established using a metallic earth connector, which is laid in the coupling. The STRAUB earth connector replaces the external cable bridge.

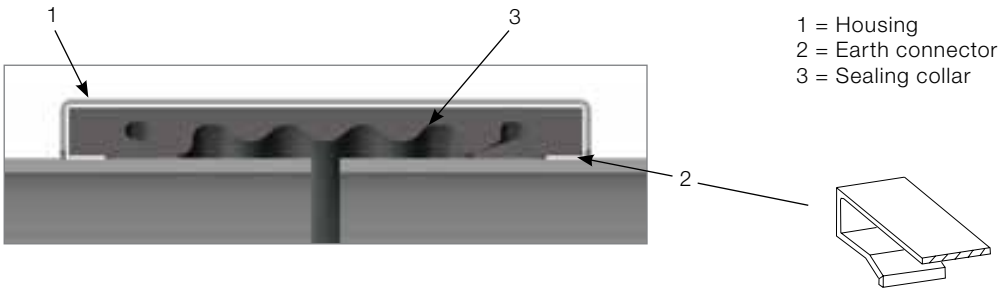

1 = Housing
2 = Earth connector
3 = Sealing collar

Torque wrench

It is a requirement to use a torque wrench for the successful installation of a coupling. The range of torque required can be covered with three torque wrenches.

- 4,5 - 30 Nm; Adapter 3/8“ to ½“
- 25 - 125 Nm
- 65 - 335 Nm

TECHNICAL INFORMATION

ASSEMBLY TOLERANCES

SETTING GAP BETWEEN PIPE ENDS

A space between pipe ends can arise through misalignment, inaccurate assembly or changes in length. STRAUB couplings can bridge spaces between pipe ends. Please note the R value given in the technical datasheets. (Strip inserts see page 25)

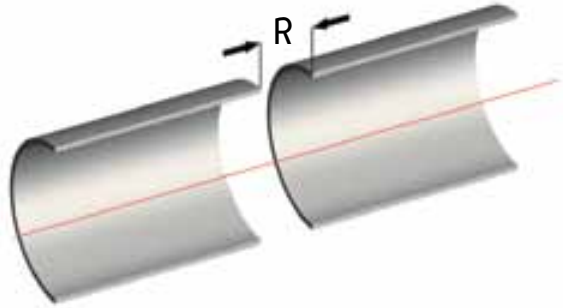

AXIAL MISALIGNMENT

With misaligned axes, the pipes meet axially offset. STRAUB couplings accommodate an axial offset of 1 % of the external diameter up to a maximum of 3 mm. The axial offset can also be converted to a misalignment or with a universal joint with two couplings.

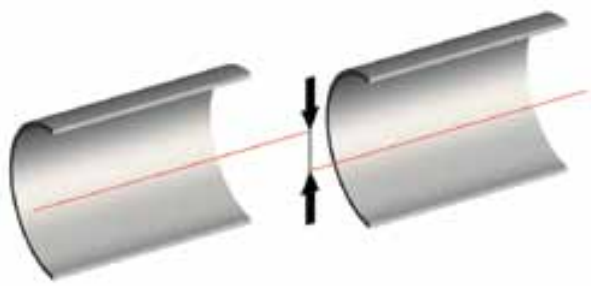

UNIVERSAL JOINT WITH TWO COUPLINGS

Axial offsets can be bridged using the principle of a universal joint.

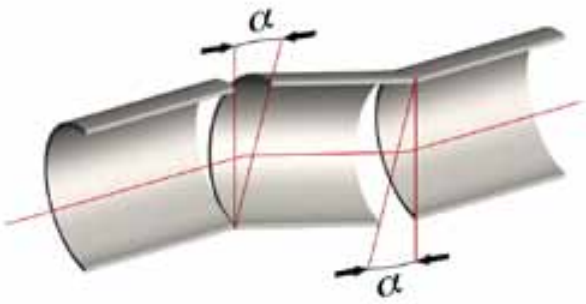

ANGULAR DEFLECTION

Pipe systems are subjected to many types of movement. Above all in offshore technology and in shipbuilding, additional dynamic loads have to be absorbed. STRAUB couplings are not rigid connecting elements: they equalise misalignments in the pipe as follows:

Outside diameter OD mm		α Degree
GRIP	**FLEX / OPEN-FLEX**	
up to 60.3	up to 60.3	5
from 76.1	from 76.1	4
from 219.1	from 219.1	2

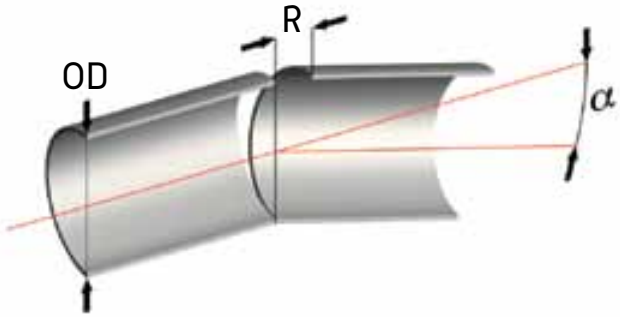

DIMENSIONS AND MINIMUM WALL THICKNESS AT NOMINAL PRESSURE PN
(INCL. 4-TIMES SAFETY FACTOR)

Pipe OD		Nominal diameter		Minimum wall thickness	
				STRAUB-GRIP-L / STRAUB-METAL-GRIP	
metric (mm)	IPS (inch)	metric (DN)	IPS (Nom)	Stainless steel (mm)	CuNi10 Fe (DIN) CuNi10Mn1Fe (ISO) (mm)
26.9	1.050	20	¾	1.5	1.5
30.0	1.180	25	1.2	1.5	1.5
33.7	1.325	25	1	1.5	2.0
38.0	1.495	32	1.5	1.5	2.0
42.4	1.670	32	1 ¼	1.5	2.0
44.5	1.750	40	1.75	1.5	2.0
48.3	1.900	40	1 ½	1.5	2.0
54.0	2.125	50	2.125	1.5	2.0
57.0	2.245	50	2.25	1.5	2.0
60.3	2.375	50	2	1.5	2.0
66.6	2.625	65	2 ½	2.0	2.0
70.0	2.756	65	2 ½	2.0	2.0
73.0	2.875	65	2 ½	2.0	2.0
76.1	(3.000)	65	(30.D.)	2.0	2.0
79.5	3.125	65	3	2.0	2.0
84.0	3.305	80	3.3	2.0	2.0
88.9	3.500	80	3	2.0	2.0
100.6	3.960	80	(3)	2.0	2.3
101.6	(4.000)	90	(3 ½)	2.0	2.3
104.0	4.095	100	4.1	2.0	2.3
104.8	4.125	100	(4)	2.0	2.3
108.0	4.250	100	4 ¼	2.0	2.3
114.3	4.500	100	4	2.0	2.3
127.0	5.000	100	4 ½	2.6	3.0
129.0	5.080	125	5	2.6	3.0
130.2	5.125	125	(5)	2.6	3.0
131.0[1]				3.0	
133.0	5.235	125	5 ¼	2.6	3.0
139.7	(5.500)	125	(5 ½)	2.6	3.0
141.3	5.565	125	5	2.6	3.0
154.0	6.065	150	6.1	2.6	3.0
155.0[1]				2.5	
159.0	6.260	150	6 ¼	2.6	3.0
168.3	6.625	150	6	2.6	3.5
193.7	7.625	200	7.6	3.0	3.5
206.0[1]				3.0	
219.1	8.625	200	8	3.0	3.5
244.5	9.625	225	9	To special order	4.5
256.0[1]				To special order	
267.0	10.510	250	10.5	To special order	4.5
273.0	10.750	250	10	To special order	5.0
306.0[1]				To special order	
323.9	12.750	300	12	To special order	5.5
355.6	14.000	350	14	To special order	6.0
406.4	16.000	400	16	To special order	8.0
457.2	18.000	450	18	To special order	9.0
508.0	20.000	500	20	To special order	10.0
558.8	22.000	550	22	To special order	10.0
609.6	24.000	600	24	To special order	12.0

- Thinner walls are possible at lower pressures, please ask your local partner or the manufacturer.
[1] Standard pipe dimension for stainless steel. (Outer diameter related to the wall thickness)

MATERIAL SPECIFICATIONS OF STRAUB COUPLINGS

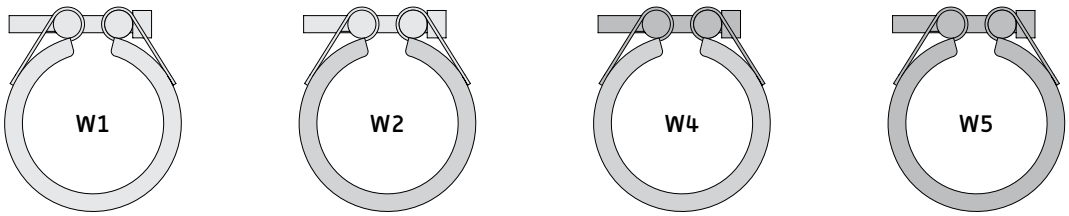

	Materials							
	DIN	AISI	DIN	AISI	DIN	AISI	DIN	AISI
Components	**W1**		**W2**		**W4**		**W5**	
Casing	1.0570, galvanised	1024	1.4301/1.4571/ 1.4404	304/316T/ 316 L	1.4301	304	1.4571/1.4404	316 Ti/ 316 L
Bolts	1.7220	4135	1.7220	4135	1.4404/1.4435	316 L	1.4404/1.4435	316 L
Bars	1.0737, galvanised	12L14	1.0737, galvanised	12L14	1.4404/1.4435	316 L	1.4404/1.4435	316 L
Anchoring ring	1.4310	301	1.4310/1.4301	301	1.4310/1.4301	301	1.4310	301
Strip insert (optional)	1.4435 PVDF/HDPE	316 L	1.4435 PVDF/HDPE	316 L	1.4435 PVDF/HDPE	316 L	1.4435 PVDF/HDPE	316 L

MATERIAL SPECIFICATIONS AND CORROSION RESISTANCE

Material sub group		Class of material	Old Krupp Norm	Steel notation			PRE	Sensitivity compared with hole and crack corrosion
	Parts			BS	DIN	ASTM AISI		
FE 1	1			(SMO254)	1.4547 1.4501 (Super Duplex)	S31254	35 35	extremly low
	2			- 318S13	1.3964 1.4462 (Duplex)	- S31803	33 33	very low
	3	W5						very low
	4	W5 W5 W5 W4	V4A V4A V4A V4A	316S31 316S11 - 320S31	1.4401 1.4404 1.4435 1.4571	316 316L 316L 316Ti	25 26 28 27	low
FE 2		W4 W4 W2	V2A V2A V2A	 304S16 301S21	1.4162 (Lean Duplex) 1.4301 1.4310	 304 301	19 19 19	high
		W1			1.0737		<5	very high
					1.0570		<5	very high

APPLICABILITY OF STRAUB COUPLINGS ON DIFFERENT PIPE MATERIAL

Pipe material	METAL-GRIP / GRIP-L	CLAMP/FLEX / OPEN-FLEX	COMBI-GRIP / PLAST-GRIP	Stiffening ring	Remarks
HDPE, PP, Noryl	-	X	X	X	FLEX/OPEN-FLEX: proper anchoring
PVC, ABS, CPVC	X	X	X	X	Stiffening ring required as from 30˚C
GFK (centrifugal and cross-wound pipes)	-	X	-	-	Seal pipe surface at the cutting edge
Asbestos cement (Eternit)	-	X	-	-	
Concrete	-	X	-	-	Equalize rough surface with coating or filler
Cast (ductile, grey)	X	X	X	-	
Glass, Ceramic	-	X	-	-	
Copper-Nickel	X	X	X	(X)	Soft copper with stiffening ring only
Aluminium	X	X	X	-	
Stainless steel, c-steel	X	X	-	-	Observe minimum pipe wall thickness

CORROSION CHECK LIST

Corrosivity category (ISO12944, EN 12500)	Application example	Corrosivity	Inside	Outdoors	W1	W2	W4	W5 or better
C1-C2	Building construction, building systems, underground car parks	insignificant, low	C1: Heated buildings with low air humidity C2: Occasional condensation, insignificant air contamination	C1: Dry and cold climate zones C2: Very rural and generally dry areas				
C3	Building construction, building systems, low environmental demands	moderate	Production areas with intermittent condensation and moderate air contamination	Temperate climates, low air contamination, middle-sized city climate, virtually no road salting				
C4	Process pipes, applications in urban areas	high	Production areas with frequent condensation and moderate air contamination	Industrial and city areas with temperate climate but high air contamination, areas affected by road salting (bridges)				
C5 (C5-I)	Industrial, areas near industry	very high	Production areas with continuous condensation and/or high air contamination (mines, tunnels)	Temperate climate with high air contamination, particles containing sulphates, soot, dust of unknown composition				
C5-M (maritime climate)	Shipbuilding, machine rooms, coastal climate roofed	high	Inside damp, often condensation, no chlorides or sulphates	Roofed, no direct precipitation but coastal maritime climate or less than 5 km inland				
C5-M (maritime climate)	Shipbuilding, bilge, systems, coastal climate open to weather	very high	Condensation, no cleaning of surfaces, high temperatures above 30° C, salts containing chloride or sulphate particles with the possibility of concentration	Open to weather, coastal or off-shore areas, splash water zone, less than 5 km inland, possibly industrial				
Im1 – Im3 (immersion)	**Im1**: Underground applications	**Im2**: Applications in contact with fresh water, drinking water, municipal sewage system		**Im3**: Applications in sea or brack water				

low corrosivity

high corrosivity

FITTING / DISASSEMBLY INSTRUCTIONS

STRAUB COUPLINGS

(Short version. Please note complete fitting instruction for each type of coupling.)

		Preparation
1		De-burr and remove sharp edges from pipe ends. Clean the pipe surface from impurities (bad coating). No loose matter under sealing lips
2		Mark half-width of pipe coupling on both pipe ends as fitting guide.
3		Remove plastic packing straps fitted and fit the pipe coupling over the pipe end. • Do not dismantle the pipe joint. • Do not drop the pipe joint.
		Pipe alignment
4		**Setting gap between pipe ends** A space between pipe ends can arise through misalignment, inaccurate assembly or changes in length. STRAUB couplings can bridge spaces between pipe ends. Please note the R value given in the technical datasheets. (strip inserts see page 25)
5		**Axial movement** STRAUB-FLEX/OPEN-FLEX couplings act as expansion joints within stated limits. **Max. axial movement** **STRAUB-Type** — **mm** FLEX 1 / OPEN-FLEX 1 — 5 FLEX 2 / OPEN-FLEX 2 — 10
6	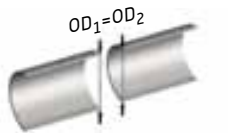	**Clamping range** Connecting two pipes with equal outside diameter. (see also datasheets)
7	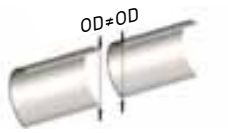	**Outside diameter difference** up to Ø 100mm -> 2mm — up to Ø 3.94" -> 0.08" from Ø100mm -> 2% — from Ø 3.94" -> 2% from Ø 300mm -> 6mm — from Ø 11.81" -> 0.24"
		Do not work above limits 4 - 7 or accumulate. Limits are for static loads and radial rigid pipes only. For dynamic forces like pressure surges and thrust apply safety factor (contact your local partner or the manufacturer).
		Bolting
8		Adjust pipe coupling then tighten bolts lightly and alternately with a ratched wrench or powered

FITTING / DISASSEMBLY INSTRUCTIONS

9		Do not rotate pipe coupling on the pipe once teeth are engaged.
10		Tighten the locking bolts with a torque wrench to the final prescribed torque rate engraved on the pipe coupling's outer surface. The torque wrench must be set to the value accordingly.
		Failure prevention: Do not tighten bolts above prescribed torque rate. **Trouble shooting:** In case of leakage clean pipe and sealing lips surface before installing pipe coupling again. Detachable and reusable (see disassembly instruction).
		Safety measures before removing pipe joint
1		Loosen screws alternately but do not remove completely. Do not rotate pipe coupling on pipe as long as teeth are engaged.
		Disassembly
2		Loosen screws alternately but do not remove completely. Do not rotate pipe coupling on pipe as long as teeth are engaged.
		Loosen teeth engagement
3		Insert tool underneath casing and lift. **Caution!** Do not harm sealing sleeve.
		Remove pipe joint
4		Slide pipe coupling to the side. **Caution!** Sealing lip may touch pipe end. Turn and move pipe joint smoothly. Clean pipe coupling and re-lubricate bolts with an appropriate lubricant before refitting.
		**Additional corrosion protection** (see page 30) If risk of corrosion exists, for long term pipe coupling protection use shrink sleeves or protection tapes. Especially in case of couplings used underground.
		**Application** **Pipe couplings can not take shearing forces** (see installation consideration). STRAUB pipe couplings are maintenance-free, i.e. never retighten bolts. Contact factory for minimal wall thickness of pipe.

Please note the following when buying and using STRAUB couplings:

Maintenance	STRAUB couplings are completely maintenance free.
Regular testing	STRAUB couplings require no regular testing of any kind.
Re-use	STRAUB couplings can be removed and reused several times. Please observe the relevant installation instructions.
Torque	Thanks to the low bolt torque, the service life of the coupling is massively increased. It is a requirement to adhere to the torque noted on the coupling label.
Label	 **PN**: nominal pressure (for shipbuiliding) **PS**: working pressure (not for shipbuiliding)
Guarantee	Years of experience are behind this coupling. Therefore we offer the STRAUB 5-year guarantee! (STRAUB-CLAMP 1 year)
Information	For further information, our Solution Managers are pleased to help at +41 81 725 41 00.

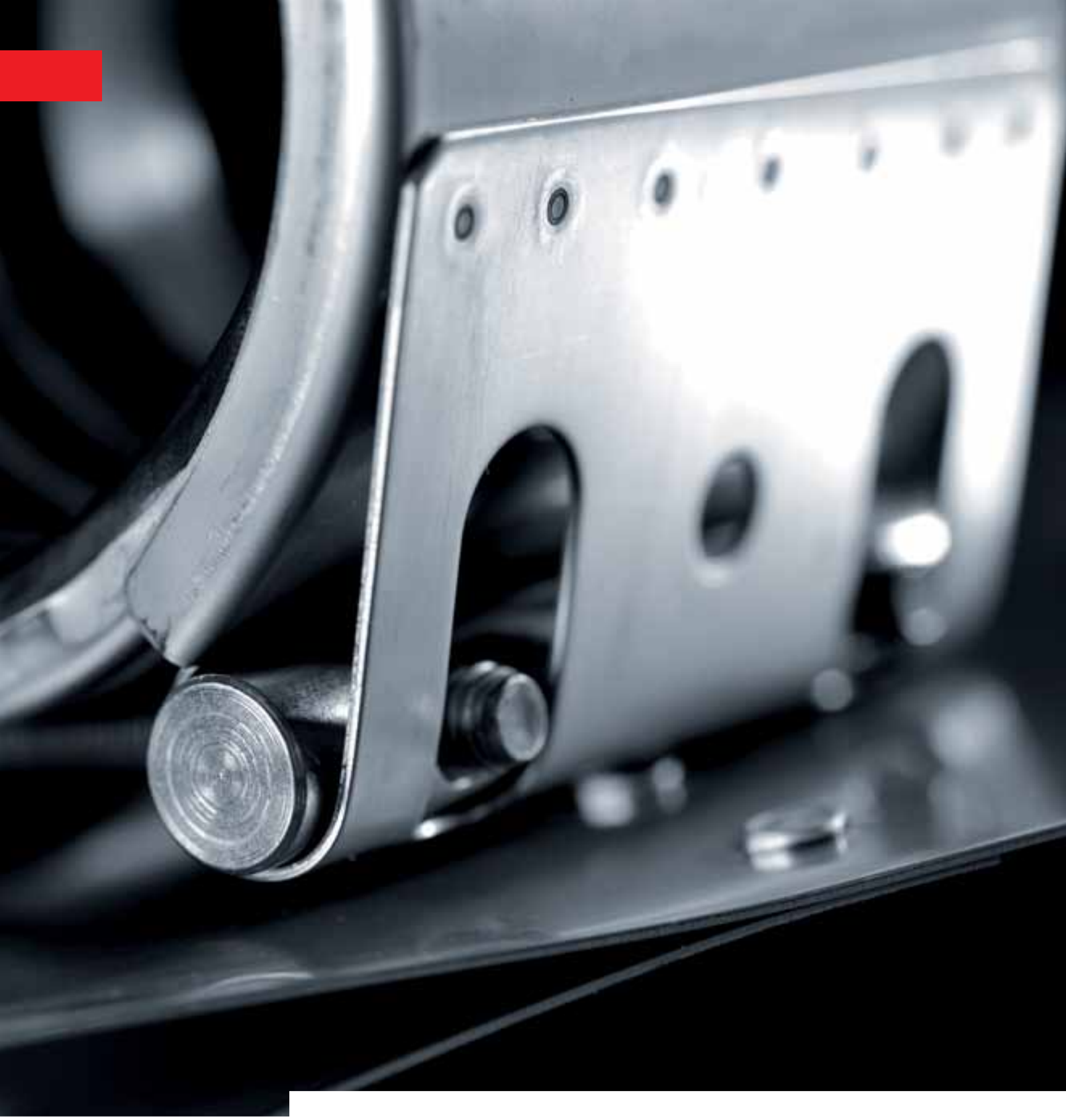

APPROVALS

CLASSIFICATION SOCIETIES AND IACS

Throughout the world there are 10 internationally recognised classification societies within the IACS as an umbrella organisation. With the UR (unified requirements), the IACS lays down minimum technical requirements for all members. These are based on a broad consensus, but despite these individual classes, exhibit small differences in their rules and standards.
STRAUB pipe couplings are described and regulated in URP 2.2 “Piping rules for piping design, construction and testing”. To standardise the term for all, the expression “slip-on-joint” has been specified as the general product description for STRAUB type couplings.

IACS has produced various test standards that have to be fulfilled by all market participants. With these comprehensive tests, the STRAUB coupling has become one of the most tested products in shipbuilding. The detailed test requirements can be found at www.IACS.org in DIN 86128.

STRAUB fulfils all requirements of IACS and the 10 classification societies. For ship owners and shipyards, the main advantage is that they do not have to worry about certificates or special acceptance procedures for individual ships.

POSITION OF THE FLAG STATES IN THE AREA OF SPRINKLER SYSTEMS

When a ship is registered in the shipping register of a country and flies its flag, that country’s legal system and safety regulations apply on board. As a result, the flag state has an influence and a voice in the matter of fire extinguishing and sprinkler pipes.

Thanks to various agreements and contacts with the flag states, STRAUB has been able to increasingly create additional applications for sprinkler systems in recent years. The acceptance of the flag states for fire extinguishing systems is the basis for the application of “slip-on-joints”.

Glossar: IACS International Association for Classification of Ships
ISO International Standard Organisation
DIN Deutsche Industrie Norm

APPLICATION OF MECHANICAL JOINTS

ACCORDING TO IACS RULES AND REGULATIONS

Systems	IACS	Appli-cation	Application and restrictions									
			A	B	G	H	I	J	K		L	M
	According to IACS	Practical usage	Inside machinery space cat. A	Other machinery spaces	Fuel oil tanks	Ballast water tanks	Cofferdams void spaces pipe tunnel and ducts	Accommodation and control space	Open decks	On freeboard deck	Pipes with access to the sea	Inside pipes with access to the sea
Flammable fluids (Flash point <60 °C)												
Cargo oil lines	+5)	S	N/A	S	N/A	N/A	F	F	F	F	N/A	N/A
Crude oil washing lines	+5)	S	N/A	S	N/A	N/A	F	F	F	F	F	N/A
Vent lines	+3)	F	F	F	N/A	N/A	F	F	F	F	F	N/A
Inert gas												
Water seal effluent lines	+	S	S	S	N/A	S	S	S	S	S	S	S
Scrubber effluent lines	+	S	S	S	N/A	N/A	S	S	S	S	S	S
Main lines	+2)5)	S	N/A	S	N/A	N/A	F	F	F	F	F	N/A
Distribution lines	+5)	S	F	S	N/A	N/A	S	S	F	F	F	N/A
Flammable fluids (Flash point >60 °C)												
Cargo oil lines	+5)	S	F	S	F	N/A	S	S	S	S	S	N/A
Fuel oil lines	+3)2)	F	N/A	F	F	N/A	F	F	F	F	F	N/A
Lubricating oil lines	+2)3)	F	N/A	F	N/A	N/A	F	F	F	F	F	N/A
Hydraulic oil	+2)3)	F	N/A	F	F	N/A	F	F	F	F	F	N/A
Thermal oil	+2)3)	F	N/A	F	F	N/A	F	F	F	F	F	N/A
Sea-water												
Bilge lines	+1)	S	F	S	N/A	S	S	S	S	S	S	N/A
Fire main and water spray	+3)	F	F	F	N/A	F	F	F	F	F	F	N/A
Foam system	+3)	F	F	F	N/A	F	F	F	F	F	F	N/A
Sprinkler system filled with water	+3)	F	F	F	N/A	F	F	F	F	F	F	N/A
Sprinkler system not filled with water	–	Dependent from the respective flag state										
Ballast system	+1)	S	F	S	N/A	S	S	S	S	S	S	N/A
Cooling water system	+1)	S	F	S	N/A	S	S	S	S	S	S	N/A
Tank cleaning services	+	S	S	S	N/A	S	S	S	S	S	S	S
Non-essential systems	+	S	S	S	N/A	S	S	S	S	S	S	S
Fresh water												
Cooling water system	+1)	S	F	F	N/A	N/A	S	S	S	S	S	N/A
Condensate return	+1)	S	F	F	N/A	N/A	S	S	S	S	S	N/A
Non-essential systems	+	S	S	S	N/A	S	S	S	S	S	S	S
Sanitary / drain / Scuppers												
Deck drains	+4)	S	S	S	S	S	S	S	S	S	S	N/A
Sanitary drains	+	S	S	S	S	S	S	S	S	S	S	N/A
Scupper and discharge overboard	–	N/A	N/A	N/A	N/A	N/A	N/A	N/A	N/A	N/A	N/A	N/A
Sounding / vent												
Water tanks and dry spaces	+	S	S	S	N/A	S	S	S	S	S	S	S
Oil tanks (f.p.>60°C)	+2)3)	F	N/A	F	N/A	F	F	N/A	F	F	F	N/A
Miscellaneous												
Starting control air	–	N/A	N/A	N/A	N/A	N/A	N/A	N/A	N/A	N/A	N/A	N/A
Service air (non-essential)	+	S	S	S	N/A	S	S	S	S	S	S	S
Brine	+	S	S	S	N/A	S	S	S	S	S	S	S
Variations of guidelines and rules by different IACS class companies have to be considered												

Notes: **+1)** Inside machinery spaces cat A, approved fire resistant types only
+2) Not inside machinery spaces cat A or accommodation spaces. May be accepted in other machinery spaces provided the joints are located in easily visible and accessible points **+3)** Approved fire resitant types
+4) bove freeboard deck only **+5)** IIn pump rooms and open decks approved fire resistant types only
S) Staub-Coupling **F)** STRAUB-FIRE-FENCE. **N/A)** Not / applicable

SAFETY NEEDS EVIDENCE

The following tests have been carried out in accordance with IACS URP 2.2 and DIN 86128:

Tightness test

- 1.5 x PN
- 5 min. tight

Vibration test

- 1 x PN
- 3 x 10^6 cycles
- Amplitude 0,06 / 0,5 / 1,5 mm
- Frequency 100 / 45 / 10 Hz

Burst pressure test

- 4 x PN
- 5 min. tight

Pull-out-test

- 1x PN + F_{ax} (PN as appropriate)
- 5 min. without leakage or other faults

Fire-endurance test

In accordance with ISO 19921 and 19922

- 1 x PN
- 30 min.
- 800° C
- Pressure test: 2 x PN; 5 min. tight

Vacuum test

- 170 mbar absolute
- 5 minutes tight

Repeated assembly test

- 10 x assembly and dismantling
- 1.5 x PN pressure test
- 5 min. tight

Other tests:

Pressure pulsation test

For STRAUB couplings not required

- Pressure pulsation 0 bar up to 1.5 x PN
- 30 – 100 cycles per minute
- 5 x 10^5 cycles
- No leakage, no plastic deformation

Shock test

- Acceleration 140g surface ships
- Acceleration 200g submarines (for CuNiFe and C steel pipes)

Angular deflection test

- Angular deflection 20°
- 20 bar; 114.3 mm
- 5 min. tight

Jump test

- 1 x PN
- Impact of 100 kg weight on coupling
- No leakage
- Angular deflection approx. 20°

REFERENCES

REFERENCES

STRAUB pipe couplings are widely used in shipbuilding and on drilling platforms as our couplings offer innumerable applications possibilities and are also an exceptionally cost effective option. Shipbuilders in particular are continuously faced with the challenge of laying numerous pipes in awkwardly tight, difficult-to-access areas and are also under pressure to cut costs at the same time. In these circumstances, an optimum pipe-connecting system is what is called for. Using STRAUB pipe couplings provides flexibility and numerous cost-effective advantages that have greatly benefitted many companies over the years.

OUR REFERENCES:

Australia
– Tenix Defence Systems, Williamstown

China
– Hu Dong Shipyard, Shanghai

Denmark
– Orskov Yard A/S, Frederikshavn
– Frederica Shipyard Limited, Fredericia
– Lindö Werft, Odense

Germany
– Fr. Lürssen Werft, Lemwerder
– Lürssen-Kröger Werft, Schacht-Audorf
– Lürssen Werft, Berne-Bardenfleth
– Neue Jade Werft, Wilhelmshaven
– Blohm & Voss International GmbH, Hamburg
– Nobiskrug GmbH, Rendsburg
– HDW, Kiel
– Peene-Werft GmbH, Wolgast
– Volkswerft, Stralsund
– Sietaswerft, Neuenfelde/Hamburg
– Abeking und Rasmussen, Lemwerder
– Fassmer Werft, Berne
– Lindenauwerft, Kiel

France
– DCNS
– PIRIOU
– Guy Couach, Plascoa
– CMN Shipyard
– SOCARENAM

Italy
– FINCANTIERI, Genova + Trieste
– T. MARIOTTI SpA, Genova
– Cantieri Navali Rodriguez, Messina-Pietra Ligure
– Cantieri RIZZARDI, Saubaudia (Latina)
– ISA, International Shipyards Ancona, Ancona
– AZIMUT-Benetti Yachts, Livorno + Viareggio
– Ferretti Group, Cattolica
– S. Lorenzo, Viareggio
– Codecasa of Viareggio, Viareggio
– Shipyard Rossi
– Shipyard Pisa Superyacht of Pisa
– Intermarine of Sarazana, Sarazana (SP)
– Perini Navi of Viareggio, Viareggio
– Canados of Ostia, Roma

Canada
– Seaway Marine & Industrial, St. Catherines
– Kiewit Offshore Services, Marystown

Netherlands
– Scheldepoort BV, Vlissingen
– Damen Shipyards B.V., Gorinchem
– Veka Group, Werkendam
– Damen Schelde Naval Shipbuilding B.V., Vlissingen
– IHC Merwede, Hardinxveld-Giesendam

Romania
– Constanta Shipyard
– Akeryard Tulcea
– Akeryard Braila
– Severnav Turnu Severin

Russia
– OAO „Baltiyskiy Zavod“, St. Petersburg
– OAO „Severnaya Verf“, St. Petersburg
– OAO „Moroskoy Zavod ALMAZ“, St. Petersburg
– OAO „Zelenodolsk Plant named after GORKY“, Republic Tatarstan
– ZAO „Rybinski Zavod Volgotanker“, Rabinsk
– OAO „Krasnoe Sormovo“, Nizhni Novogorod

Spain
– Navantia Shipyards, Madrid

UK
– BAE Shipbuilders
– VT Shipbuilders
– Swan Hunter Shipbuilders

USA
– Nassco National, Steel and Shipbuilding Company, San Diego
– Northrop Grumman-Avondale

OUR SOLUTION – YOUR BENEFIT

Solutions that meet the highest of requirements — that is our main aim and the fundamental criteria that drives our company. We constantly strive to provide you with choice and precisely the right pipe-coupling solution to meet your needs.

Here are some examples:

PASSENGER SHIP

Cruise ship
„Carnival Splendor", Italy

Our solution:
- STRAUB-GRIP-L and STRAUB-METAL-GRIP
- Fire main, grey water and black water lines

Customer benefit:
Short down times due to fast and simple installation, safety factor 4, high dampening capacity increases passenger comfort

YACHT

„MY Trippel Seven", Germany

Our solution:
- STRAUB-GRIP-L and STRAUB-METAL-GRIP
- Seawater cooling, fire main, grey water and black water lines

Customer benefit:
Simple and safe installation

WARSHIPS

Frigate
„Horizon 6108", Italy

Other:
-Aircraft carrier
-Deployment provider
-Marine tanker
-Submarine

Our solution:
- STRAUB-GRIP-L and METAL-GRIP
- CuNiFe seawater, vent, grey and black water, sprinkler lines

Customer benefit:
High product quality, simple installation, technical advantages (dampens vibration, shock absorbing, angular deflection possible, collision and shockproof, flexible compensation of endload)

FERRY

Fast ferry
„N.G.V Asco", France

Our solution:
- STRAUB-GRIP-L, STRAUB-METAL-GRIP and STRAUB-COMBI-GRIP
- Ballast, bilge, fire main, seawater, freshwater and fuel lines

Customer benefit:
Possibility to join various pipe materials, STRAUB offers a lightweight and absorbing product

PSV PLATTFORM SUPPLY VESSELS

„Bourbon Hamos“ (GPA 670 MKII); Designer: GPA USA

Other:
- AHT Anchor Handling Tugs Vessel
- AHTS Anchor Handling Tugs Supply Vessel

Our solution:
- STRAUB-GRIP-L
- Dry bulk, fresh water, fuel lines

Customer benefits:
Easy cleaning of dry bulk lines, space saving and flexible pipe joining method

OIL PRODUCTION

Offshore- and Production Platform
„Kvitebjorn“, Norway

Other:
-Drilling ship
-FPSO

Our solution:
- STRAUB-METAL-GRIP
- Various pipe lines

Customer benefit:
Absorption of pressure surges and stress peaks

CARGO SHIPS

Transport ship
„Wagenborg“, Netherlands

Other:
-RoRo ships
-Bulk carriers
-Container ships
-Refrigerator ships
-LNG tankers

Our solution:
- STRAUB-GRIP-L
- Ballast lines

Customer benefit:
Installation of couplings possible without special tooling even in places difficult to access, increased payload

INLAND WATER VESSEL

Paddle wheel steamer
„La Suisse“, Switzerland

Our solution:
- STRAUB-GRIP-L and STRAUB-FLEX
- Fresh water, fire main, vent line

Customer benefit:
The vessel is built mainly in wood. Due to risk of explosion and fire, welding was not possible

SPECIAL VESSELS

Floating dredger
„Vasco da Gama“, Netherlands

Other:
-Research vessel
-Icebreaker

Our solution:
- STRAUB-GRIP-L
- Sanitary, fire main, ballast, cooling water lines

Customer benefit:
Tension free connection of modules, space saving installation, reduced maintenance times

EXCLUSION OF LIABILITY

The information and data in this manual are intended to assist the user in the proper selection of STRAUB products. This information may contain inaccuracies or typographical errors. Furthermore, all the information contained in this manual is subject to change by Straub Werke AG without prior notice as a result of product re-designs, product improvements or other reasons.

Straub Werke AG accepts no liability for damage arising as a result of the use of data, diagrams or application examples in this manual.

PROFIT FROM OUR

INTERNATIONAL CONNECTIONS

OUR PARTNER NETWORK – YOUR GAIN

Users in more than 60 countries place their trust in the universal STRAUB coupling concept. The Canadian subsidiary, an international partner network and a large number of support bases guarantee the shortest possible delivery times. Products are also manufactured under license in Japan and Brazil. Wherever you are, you can benefit from our international connections. Our list of partners can be found at **www.straub.ch**.

Welcome!

Straub Werke AG Rohrverbindungen · Straubstrasse 13 · 7323 Wangs · Schweiz
Tel. +41 81 725 41 00 · Fax +41 81 725 41 01 · www.straub.ch · straub@straub.ch

straub®
the original

an Aliaxis company